Technical Data
Data Sheet N3308, Rev. -

RoHS HF

MBRFA3045CT SCHOTTKY RECTIFIER

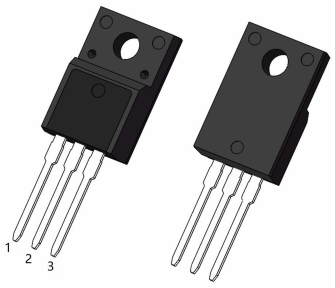

TO-220FP

Features

- 150°C T_J operation
- Center tap configuration
- Low forward voltage drop
- High purity, high temperature epoxy encapsulation for enhanced mechanical strength and moisture resistance
- High frequency operation
- Guard ring for enhanced ruggedness and long term reliability
- Terminals finish: 100% Pure Tin
- This is a Halogen Free Device
- All SMC parts are traceable to the wafer lot
- Additional testing can be offered upon request

Circuit Diagram

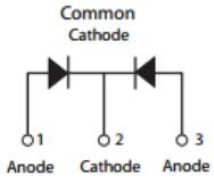

Applications

- Switching power supply
- Converters
- Free-Wheeling diodes
- Reverse battery protection

Maximum Ratings(limiting values, T_C =25°C unless otherwise specified)

Characteristics	Symbol	Condition	Max.	Units
Peak Repetitive Reverse Voltage Working Peak Reverse Voltage DC Blocking Voltage	V_{RRM} V_{RWM} V_R	-	45	V
Average Rectified Forward Current	$I_{F(AV)}$	Tc=90°C, In DC	15(Per Leg) 30(Per Device)	A
Peak Repetitive Forward Current	I_{FRM}	Rated V_R, square wave, 20KHz T_C=123 °C	30	A
Peak One Cycle Non-Repetitive Surge Current(Per Leg)	I_{FSM}	8.3ms, Half Sine pulse	240	A
Peak Repetitive Reverse Current	I_{RRM}	2.0μsec 1.0KHz	1.0	A

Electrical Characteristics:

Characteristics	Symbol	Condition	Typ.	Max.	Units
Forward Voltage Drop (Per Leg)*	V_{F1}	@30A, Pulse, T_J = 25 °C	0.60	0.84	V
	V_{F2}	@30A, Pulse, T_J = 125 °C	0.55	0.72	V
Reverse Current at DC condition (Per Leg)*	I_{R1}	@V_R = rated V_R, T_J = 25 °C	0.03	0.2	mA
	I_{R2}	@V_R = rated V_R, T_J = 125 °C	15	40	mA
Junction Capacitance(Per Leg)	C_T	@V_R = 5V, T_C = 25 °C, f_{SIG} = 1MHz	815	900	pF
Voltage Rate of Change	dv/dt	-	-	10,000	V/μs

* Pulse width < 300 μs, duty cycle < 2%

Technical Data
Data Sheet N3308, Rev. -

RoHS HF

Thermal-Mechanical Specifications:

Characteristics	Symbol	Condition	Specification	Units
Junction Temperature	T_J	in DC forward mode	-65 to +150	˚C
Storage Temperature	T_{stg}	-	-65 to +150	˚C
Typical Thermal Resistance Junction to Case	$R_{\theta JC}$	DC operation	2.4	˚C/W
Approximate Weight	wt	-	2	g
Case Style	TO-220FP			

Ratings and Characteristics Curves

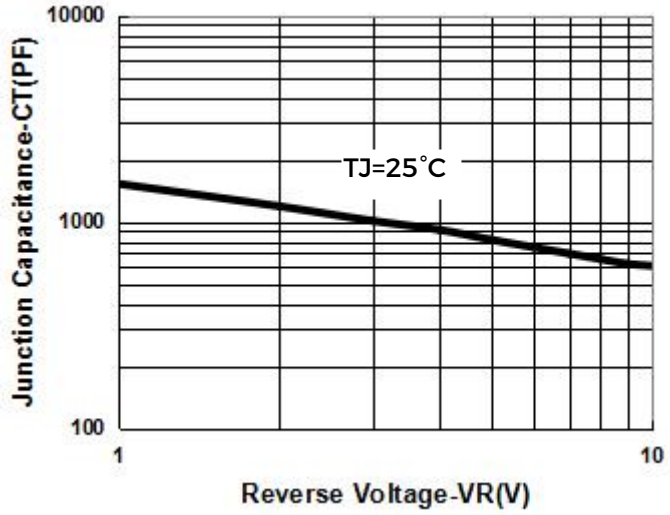

Fig.1-Typical Junction Capacitance

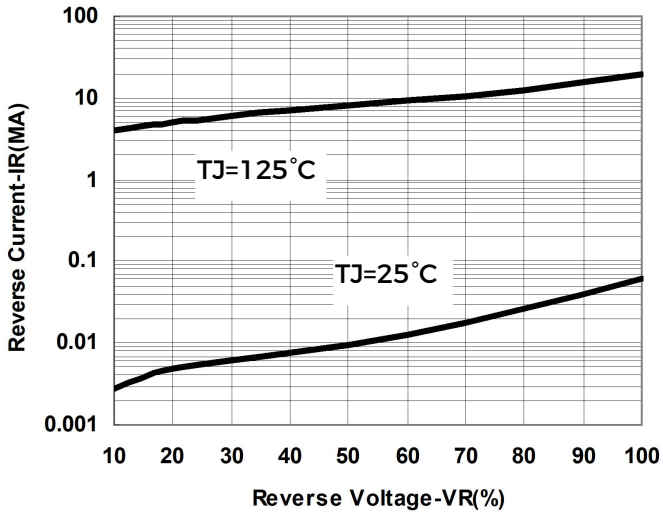

Fig.2-Typical Reverse Characteristics

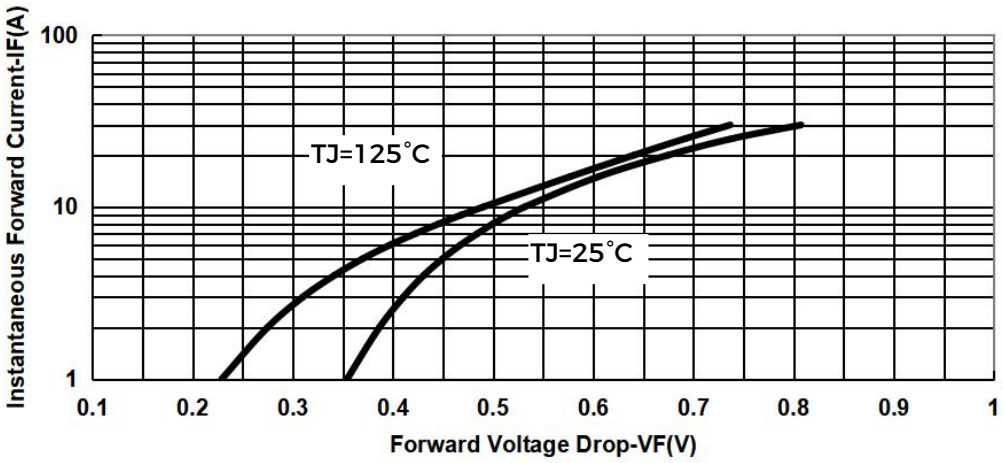

Fig.3-Typical Forward Voltage Drop Characteristics

Technical Data
Data Sheet N3308, Rev. -

RoHS HF

Mechanical Dimensions TO-220FP

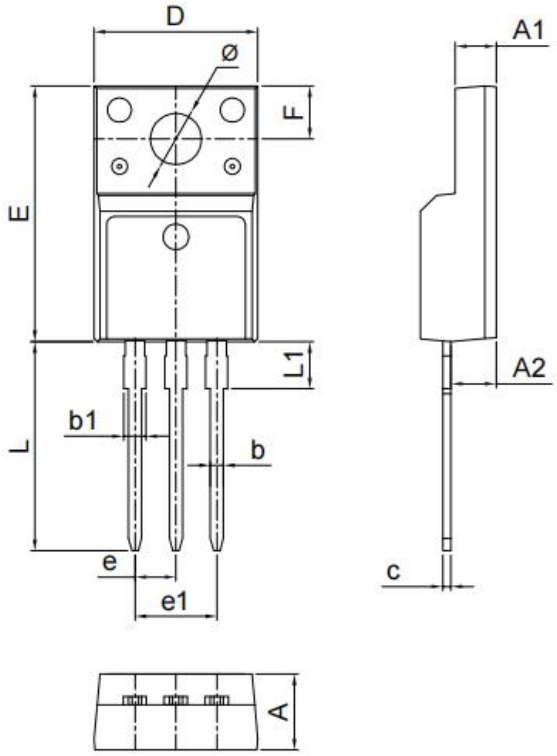

SYMBOL	Millimeters		
	MIN.	TYP.	MAX.
A	4.50	4.70	4.90
A1	2.34	2.54	2.74
A2	2.66	2.76	2.86
b	0.75	0.80	0.85
b1	1.24	1.34	1.44
c	0.40	0.50	0.60
D	10.00	10.16	10.32
E	15.75	15.90	16.05
e	2.44	2.54	2.64
e1	4.88	5.08	5.26
F	3.10	3.30	3.50
L	12.90	13.20	13.50
L1	2.90	3.10	3.30
Φ	3.10	3.20	3.30

Tube Specification

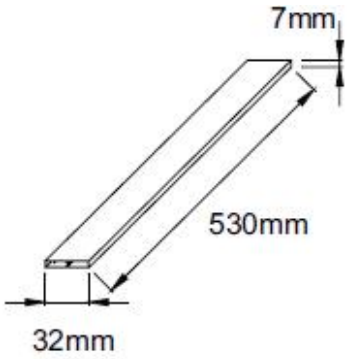

Marking Diagram

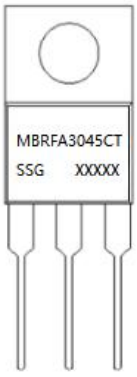

Where XXXXX is YYWWL

MBR	= Device Type
FA	= Package type
30	= Forward Current (30A)
45	= Reverse Voltage (45V)
CT	= Configuration
SSG	= SSG
YY	= Year
WW	= Week
L	= Lot Number

Cautions: Molding resin
Epoxy resin UL:94V-0

Ordering Information

Device	Package	Shipping
MBRFA3045CT	TO-220FP	50 pcs/ tube

Technical Data
Data Sheet N3308, Rev. -

RoHS HF

DISCLAIMER:
1- The information given herein, including the specifications and dimensions, is subject to change without prior notice to improve product characteristics. Before ordering, purchasers are advised to contact the SMC Diode Solutions sales department for the latest version of the datasheet(s).
2- In cases where extremely high reliability is required (such as use in nuclear power control, aerospace and aviation, traffic equipment, medical equipment , and safety equipment) , safety should be ensured by using semiconductor devices that feature assured safety or by means of users' fail-safe precautions or other arrangement .
3- In no event shall SMC Diode Solutions be liable for any damages that may result from an accident or any other cause during operation of the user's units according to the datasheet(s). SMC Diode Solution assumes no responsibility for any intellectual property claims or any other problems that may result from applications of information, products or circuits described in the datasheets.
4- In no event shall SMC Diode Solutions be liable for any failure in a semiconductor device or any secondary damage resulting from use at a value exceeding the absolute maximum rating.
5- No license is granted by the datasheet(s) under any patents or other rights of any third party or SMC Diode Solutions.
6- The datasheet(s) may not be reproduced or duplicated, in any form, in whole or part, without the expressed written permission of SMC Diode Solutions.
7- The products (technologies) described in the datasheet(s) are not to be provided to any party whose purpose in their application will hinder maintenance of international peace and safety nor are they to be applied to that purpose by their direct purchasers or any third party. When exporting these products (technologies), the necessary procedures are to be taken in accordance with related laws and regulations..